Tightness control TC

Technical Information · GB
3 Edition 04.13

- Test of two safety valves
- Short test period thanks to logical decision-making in the program sequence
- Adjustable test period which can be adapted to different systems
- Adjustable test instant allows quick system start
- Maximum safety thanks to self-monitoring electronics
- Less space required thanks to small dimensions
- EC type-tested and certified
- UL listed, FM and AGA approved

krom schroder

Contents

Tightness control TC . . . 1
Contents . . . 2
1 Application . . . 3
1.1 Examples of application . . . 6
1.1.1 TC 116V with valVario controls . . . 6
1.1.2 TC 116W with combination control CG..D or CG..V . . . 7
1.1.3 TC 116W with two-stage combination control CG..Z . . . 8
1.1.4 TC 2 with two gas solenoid valves . . . 9
1.1.5 TC 2 with two gas solenoid valves and one auxiliary valve for discharge . . . 10
1.1.6 TC 2 with two gas solenoid valves and one auxiliary valve for discharge . . . 11
1.1.7 TC 2 in a multiple burner system with 3 valves installed in series . . . 12
1.1.8 TC 3 with two gas solenoid valves . . . 13
1.1.9 TC 3 with a manually resettable valve . . . 14
1.1.10 TC 3 in a multiple burner system with 3 valves installed in series . . . 15
1.1.11 TC 4 with two gas solenoid valves . . . 16
1.1.12 TC 4 with two gas solenoid valves and one auxiliary valve for discharge . . . 17
1.1.13 TC 4 in a multiple burner system with two auxiliary valves for supply and discharge . . . 18
1.1.14 TC 4 in a multiple burner system with 3 valves installed in series . . . 19
2 Certification . . . 20
3 Function . . . 21
3.1 Connection diagrams . . . 21
3.1.1 TC 116V for valVario controls VAS, VAG and VAD . . . 21
3.1.2 TC 116W . . . 21
3.1.3 TC 2 . . . 22
3.1.4 TC 3 . . . 22
3.1.5 TC 4 . . . 23
3.2 Program sequence . . . 24
3.3 Test instant . . . 26
3.3.1 Testing before burner run: Mode 1 . . . 26
3.3.2 Testing after burner run: Mode 2 . . . 27
3.4 Power failure . . . 28
3.5 Animation . . . 29
3.6 Test period t_P . . . 30
3.6.1 Leakage rate V_L . . . 30
3.6.2 Test volume V_P . . . 31
3.6.3 Calculation example . . . 32
3.6.4 Calculating the test period t_P . . . 32
4 Selection . . . 33
4.1 Selection table . . . 33
4.2 Type code . . . 33
5 Project planning information . . . 34
5.1 Selecting the auxiliary valves . . . 34
5.2 Start rate . . . 35
5.3 Installation . . . 35
5.2.1 TC 116V for valVario controls . . . 36
5.2.2 TC 4 . . . 36
6 Accessories . . . 37
6.1 Adapter plate for TC 116V, attachment to valVario controls . . . 37
6.2 External pressure switch for TC 4 . . . 38
6.2.1 Adjustment . . . 38
7 Technical data . . . 39
7.1 Indicators and operating controls . . . 40
7.2 Dimensions . . . 41
7.2.1 TC 1, TC 2 . . . 41
7.2.2 TC 3, TC 4 . . . 42
7.3 Conversion factors . . . 43
8 Maintenance cycles . . . 44
9 Legend . . . 44
Feedback . . . 45
Contact . . . 45

▼ = To be continued

TC 1: for attachment to valVario controls and CG
TC 2: for quick opening individual valves

TC 3: for quick or slow opening or manually reset-table individual valves
TC 4: for control cabinet installation

1 Application

The tightness control TC checks the fail-safe function of both valves before each start-up or after each shut-down of a system with two safety valves.

The aim is to identify an inadmissible leak on one of the gas valves and to prevent burner start. The other gas valve continues working properly and takes over the safe shut-off of the gas supply.

It is used in industrial thermoprocessing equipment, in boilers and forced draught burners.

European standards EN 746-2 and EN 676 stipulate tightness controls for capacities over 1200 kW (NFPA 86: from 117 kW or 400,000 Btu/h in conjunction with a visual indicator). Pre-purge of the combustion chamber can be dispensed with under certain conditions in accordance with EN 746-2, if a tightness control is used. In this case, the system must be vented into the open air.

TC 1

Tightness control TC 1 can be directly mounted to all CG combination controls. There is only one version for all sizes. The pre-set test period applies to all CG variants.

In addition, TC 1 can be used for valVario controls VAS, VAD and VAG (with separate adapter plate, see page 37 (Accessories)).

TC 2 and TC 4

Tightness controls TC 2 and TC 4 can be used with gas solenoid valves of any nominal size, which are quick opening or slow opening with start rate. It is possible to conduct a tightness test on pneumatically operated or slow opening valves without start rate by using additional auxiliary valves.

Slow opening motorized valves VK up to DN 65 which are directly flanged together can also be checked by TC 2 and TC 4 within a temperature range of 0 to 60°C (32 to 140°F).

TC 4

Tightness control TC 4 consists of detection circuitry and can be installed in the control cabinet, separately from the system. An external pressure switch takes over the mechanical pressure test between the valves. Tightness control TC 4 is independent of gas type and inlet pressure p_u and can be used for a test period of up to 10 minutes with a large test volume.

TC 3

Tightness control TC 3 is a universal device for quick and slow opening gas solenoid valves of any nominal size as well as for motorized valves. The tightness test is carried out with the valves installed in TC 3.

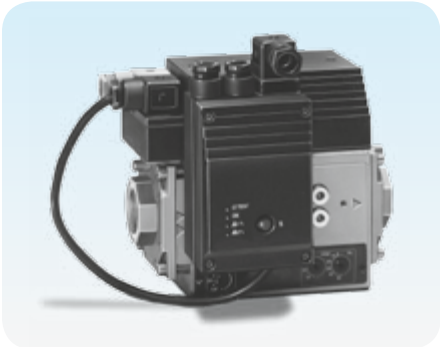

TC 1 mounted to a combination control CG

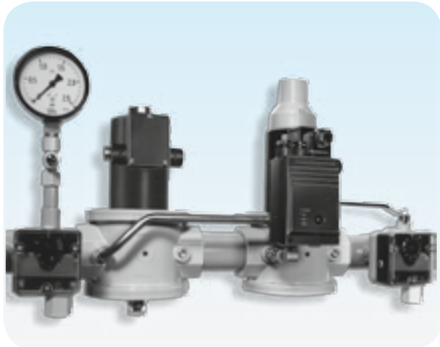

TC 2 in a gas inlet section between a quick opening and a slow opening gas solenoid valve VG

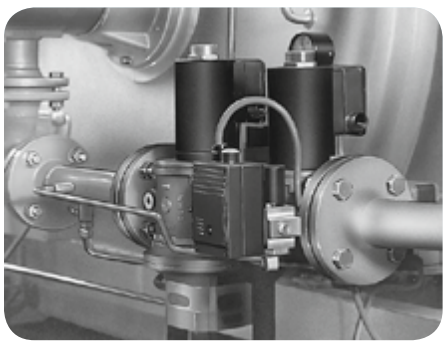

TC 3 on a heating boiler

TC 3 for tightness control on gas motorized valves VK

TC 4 installed separately from the system in a control cabinet

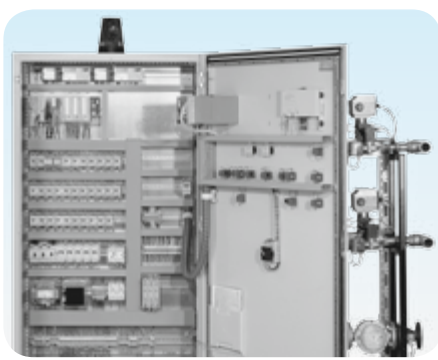

TC 4 installed in control cabinet by securing the lower section with screws or snapping it on to a DIN rail

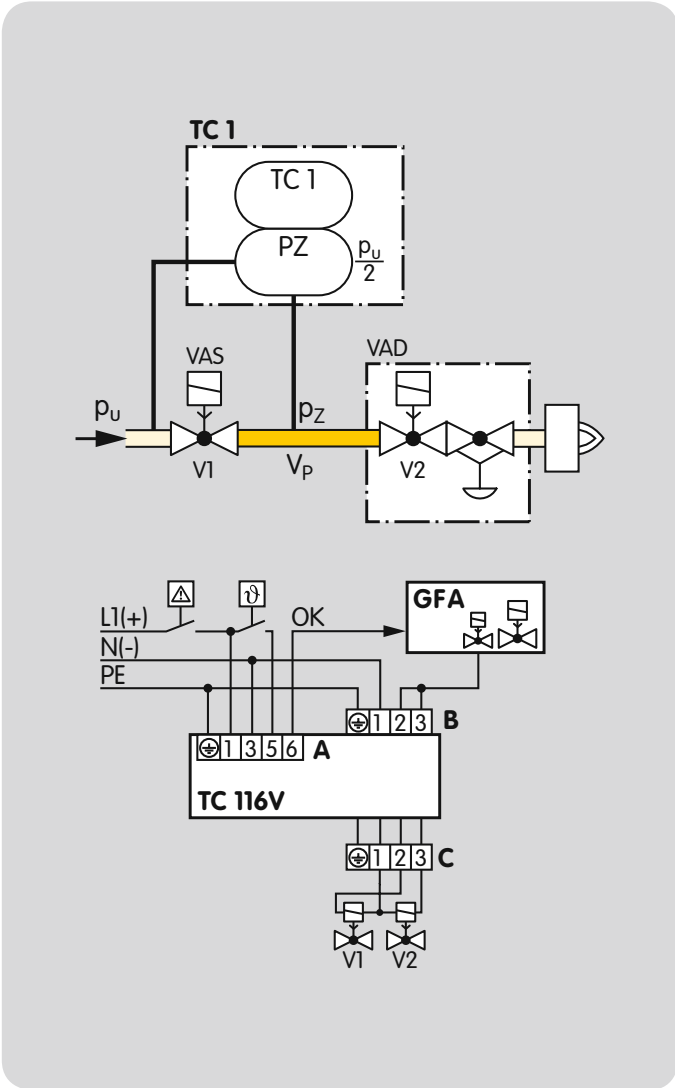

1.1 Examples of application

1.1.1 TC 116V with valVario controls

Tightness control TC 1 checks gas solenoid valves V1 and V2 for tightness.

If both valves are tight, the tightness control forwards the OK enable signal to the automatic burner control unit GFA. This opens valves V1 and V2 simultaneously. The burner starts.

V1: quick or slow opening valve with start rate.

A = Supply and signal forwarding
B = Automatic burner control unit
C = Gas solenoid valves

PZ = Internal pressure sensor of the TC for the comparison of inlet pressure p_U and interspace pressure p_Z

V_P = Test volume

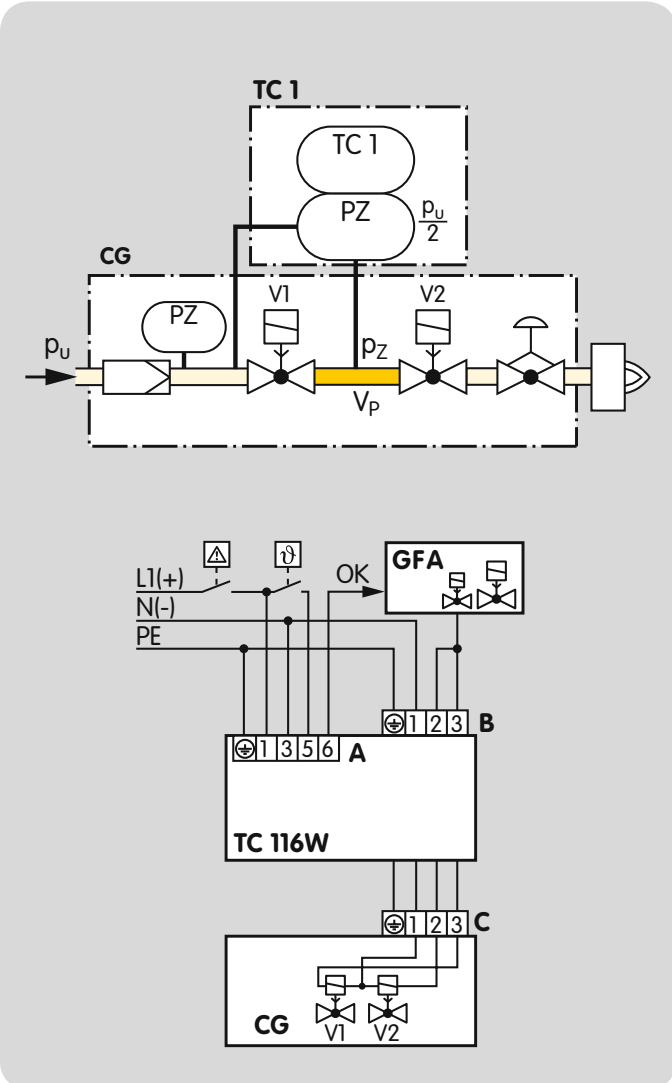

1.1.2 TC 116W with combination control CG..D or CG..V

Tightness control TC 1 is directly mounted to combination control CG..D or CG..V and checks gas solenoid valves V1 and V2 in the combination control for tightness.

Once the tightness test has been carried out successfully, the tightness control forwards the OK enable signal to the automatic burner control unit GFA. This opens valves V1 and V2 in the combination control CG simultaneously. The burner starts.

V1 and V2: quick opening valves.

A = Supply and signal forwarding
B = Automatic burner control unit
C = Gas solenoid valves

PZ = Internal pressure sensor of the TC for the comparison of inlet pressure p_U and interspace pressure p_Z

V_P = Test volume

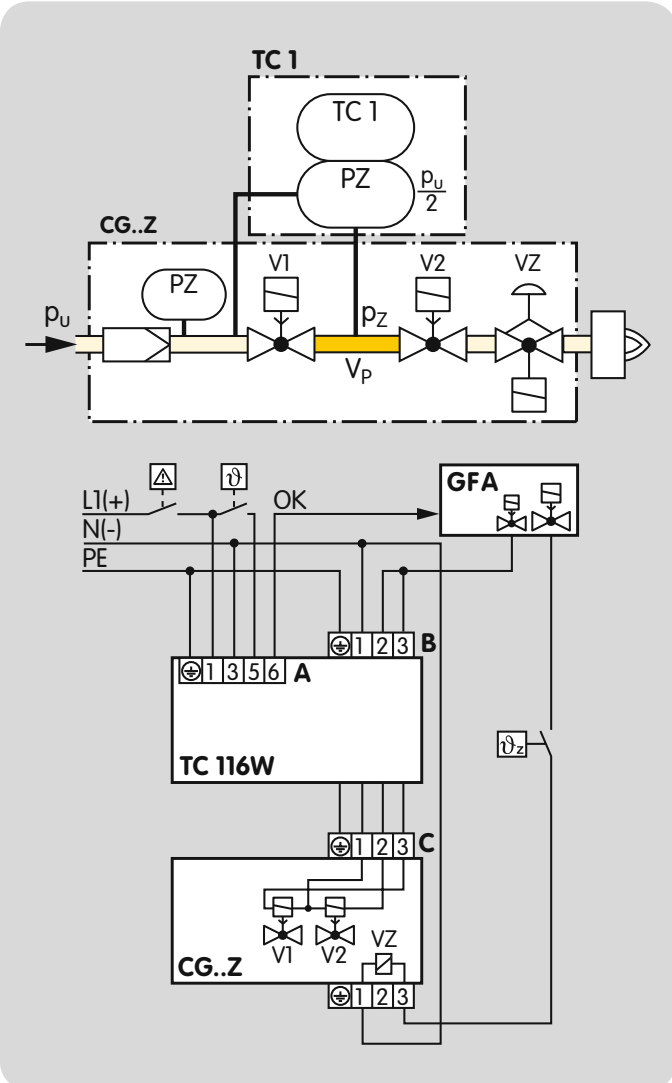

1.1.3 TC 116W with two-stage combination control CG..Z

Tightness control TC 1 checks gas solenoid valves V1 and V2 in combination control CG..Z for tightness.

Once the tightness test has been carried out successfully, the tightness control forwards the OK enable signal to the automatic burner control unit GFA. The pilot valve output of the automatic burner control unit GFA opens valves V1 and V2 in the combination control simultaneously. The burner starts. The main valve output opens the two-stage valve VZ, independently of TC 116W.

V1 and V2: quick opening valves.

A = Supply and signal forwarding
B = Automatic burner control unit
C = Gas solenoid valves

PZ = Internal pressure sensor of the TC for the comparison of inlet pressure p_U and interspace pressure p_Z

V_P = Test volume

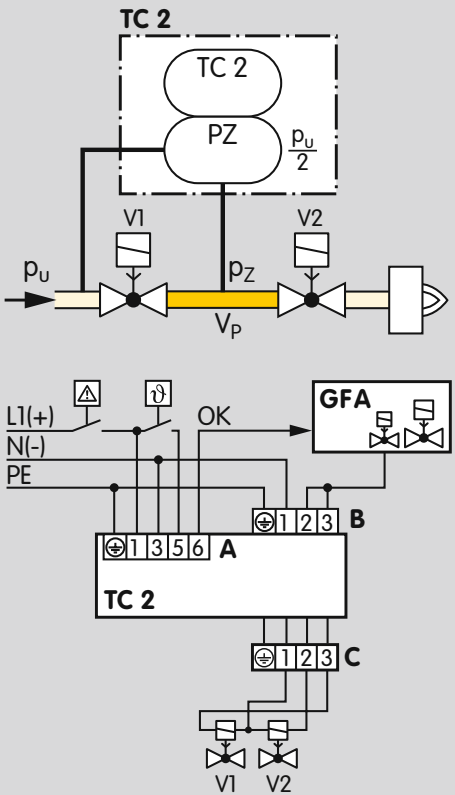

1.1.4 TC 2 with two gas solenoid valves

Tightness control TC 2 checks gas solenoid valves V1 and V2 for tightness.

If both valves are tight, the tightness control forwards the OK enable signal to the automatic burner control unit GFA. This opens valves V1 and V2 simultaneously. The burner starts.

V1 and V2: quick or slow opening valves with start rate.

A = Supply and signal forwarding
B = Automatic burner control unit
C = Gas solenoid valves

PZ = Internal pressure sensor of the TC for the comparison of inlet pressure p_U and interspace pressure p_Z

V_P = Test volume

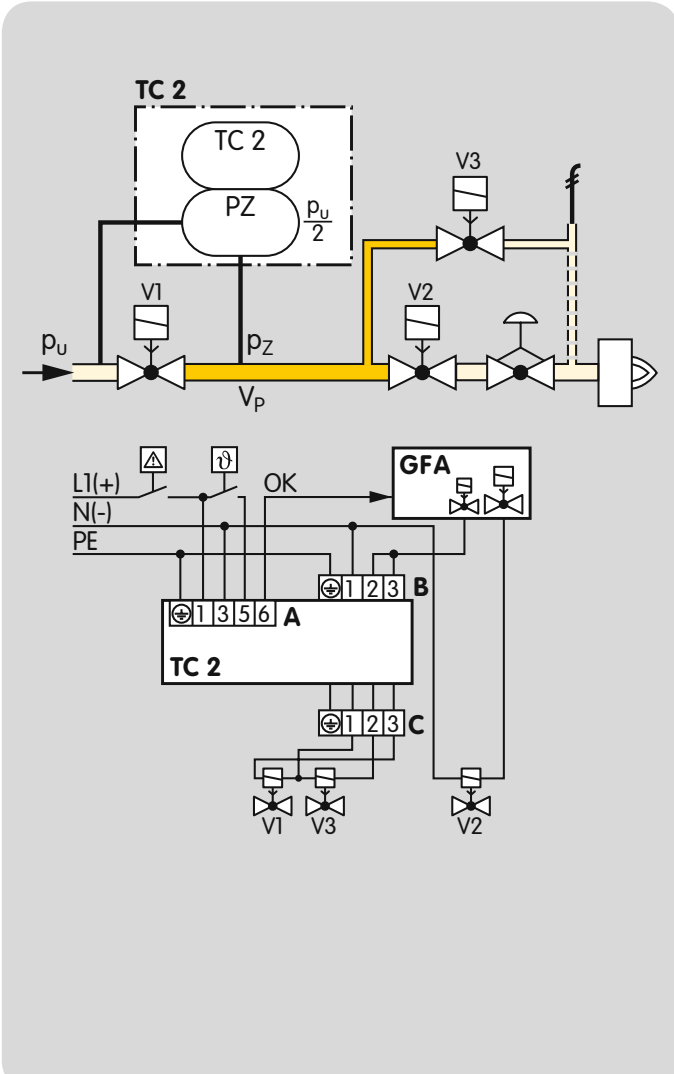

1.1.5 TC 2 with two gas solenoid valves and one auxiliary valve for discharge

Tightness control TC 2 checks the gas solenoid valves V1 and V2 and the auxiliary valve V3 for tightness.

It must be ensured that the interspace is vented during the 2-second opening time. This is not guaranteed by the gas pressure regulator downstream of V2. The test volume V_P is thus discharged into the combustion chamber or into a safe area. Auxiliary valve V3 can also be used as a pilot gas valve. Since valve V2 remains closed during the test, it can also be a slow opening motorized valve VK.

Once the tightness test has been carried out successfully, the tightness control forwards the OK enable signal to the automatic burner control unit GFA. The pilot valve output of the automatic burner control unit GFA opens the gas solenoid valves V1 and V3 simultaneously. The main valve output opens gas solenoid valve V2. The burner starts.

V1 and V2: quick or slow opening valves with start rate.
V3: quick or slow opening valve with start rate, nominal size is dependent on test volume V_P and inlet pressure p_U, see page 34 (Project planning information), but is at least DN 15.

A = Supply and signal forwarding
B = Automatic burner control unit
C = Gas solenoid valves

PZ = Internal pressure sensor of the TC for the comparison of inlet pressure p_U and interspace pressure p_Z

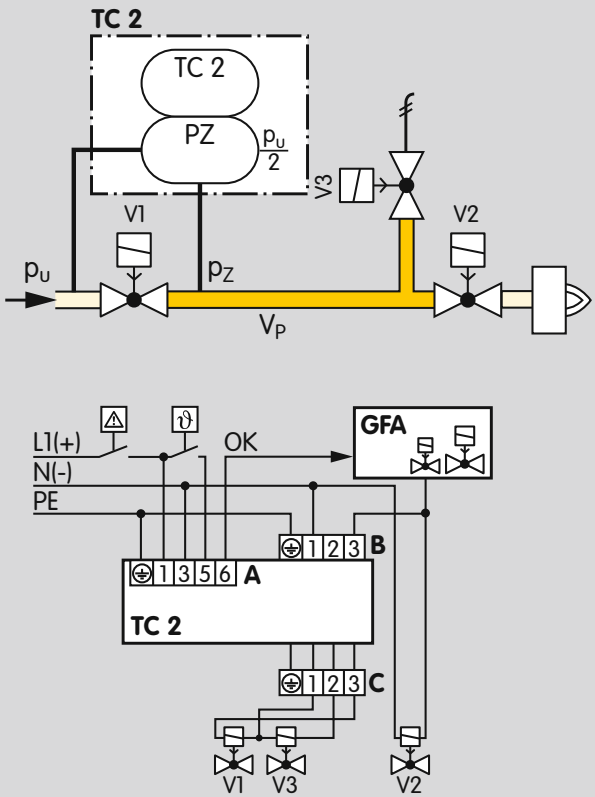

1.1.6 TC 2 with two gas solenoid valves and one auxiliary valve for discharge

Tightness control TC 2 checks the gas solenoid valves V1 and V2 and the auxiliary valve V3 for tightness.

If all the gas solenoid valves are tight, the tightness control forwards the OK enable signal to the automatic burner control unit GFA. The pilot valve output of the automatic burner control unit GFA opens the gas solenoid valves V1 and V2 simultaneously. The burner starts.

A relief line is used to discharge the test volume V_P into a safe area. Thanks to the installed auxiliary valve V3, valve V2 can also be a slow opening motorized valve VK.

V1: quick or slow opening valve with start rate.
V2: any.
V3: quick opening, nominal size is dependent on test volume V_P and inlet pressure p_U, see page 34 (Project planning information), but is at least DN 15.

A = Supply and signal forwarding
B = Automatic burner control unit
C = Gas solenoid valves

PZ = Internal pressure sensor of the TC for the comparison of inlet pressure p_U and interspace pressure p_Z

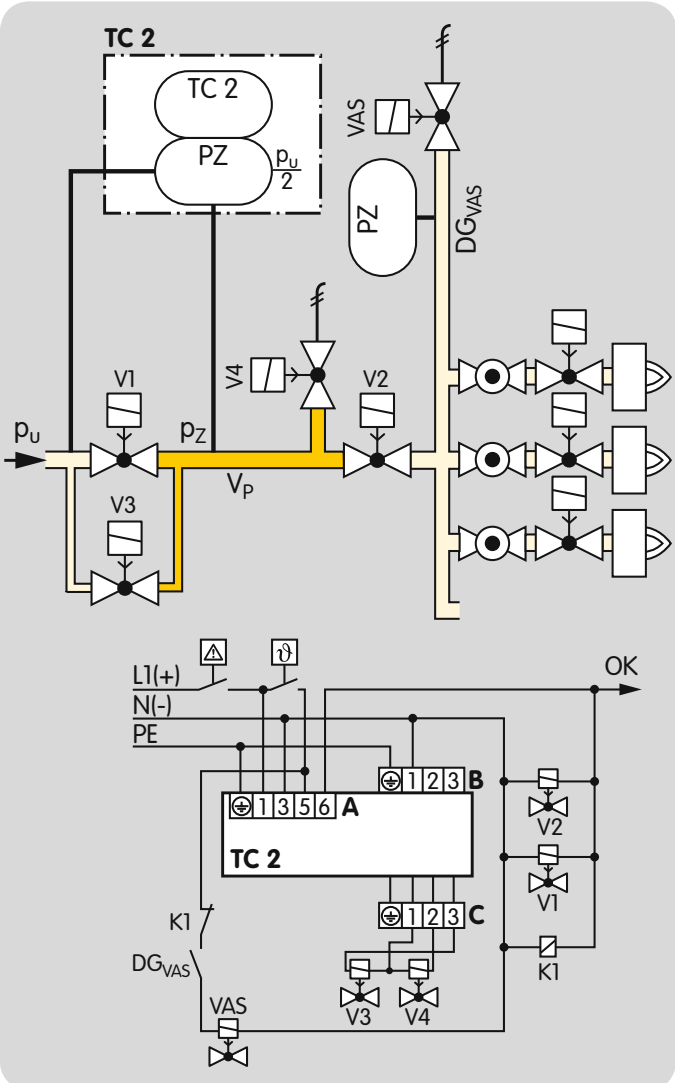

1.1.7 TC 2 in a multiple burner system with 3 valves installed in series

When using slow opening main valves (V1 and V2), auxiliary valves (V3 and V4) must be used for the supply and discharge of the test volume V_P.

Tightness control TC 2 checks the central shut-off valve V1, the gas solenoid valve V2 and the auxiliary valves V3 and V4 for tightness.

Valve V2 can only be checked for tightness when the pressure downstream of V2 approximately corresponds to the atmospheric pressure and the volume downstream of valve V2 is 5 x V_P. The gas solenoid valve VAS and the pressure switch DG_{VAS} are used to relieve the pressure. The pressure switch must be adjusted in such a way so that enough pressure is relieved and no air can get into the pipework.

Once the tightness test has been carried out successfully, the tightness control TC 2 opens the main valves V1 and V2 with the OK enable signal and enables the downstream burner control units.

V3 and V4: quick opening, nominal size is dependent on test volume V_P and inlet pressure p_U, see page 34 (Project planning information), but is at least DN 15.

A = Supply and signal forwarding
B = Automatic burner control unit
C = Gas solenoid valves

PZ = Internal pressure sensor of the TC for the comparison of inlet pressure p_U and interspace pressure p_Z

PZ = Pressure switch DG_{VAS} for monitoring the pressure downstream of V2

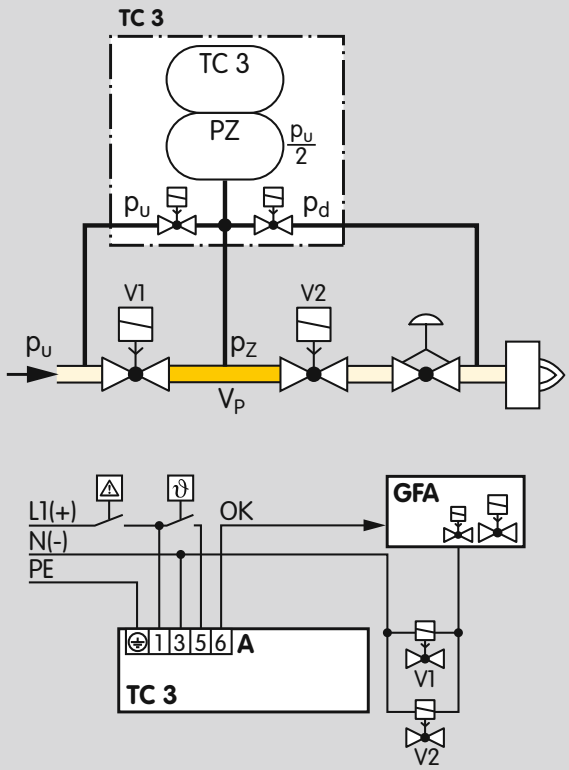

1.1.8 TC 3 with two gas solenoid valves

Tightness control TC 3 checks the slow opening gas solenoid valves or motorized valves VK for tightness using the auxiliary valves installed in TC 3.

Once the tightness test has been carried out successfully, the tightness control forwards the OK enable signal to the automatic burner control unit GFA. The pilot valve output of the automatic burner control unit GFA opens valves V1 and V2 simultaneously. The burner starts.

V1 and V2: any.

A = Supply and signal forwarding

PZ = Internal pressure sensor of the TC for the comparison of inlet pressure p_u and interspace pressure p_z

p_d = Outlet pressure

V_P = Test volume

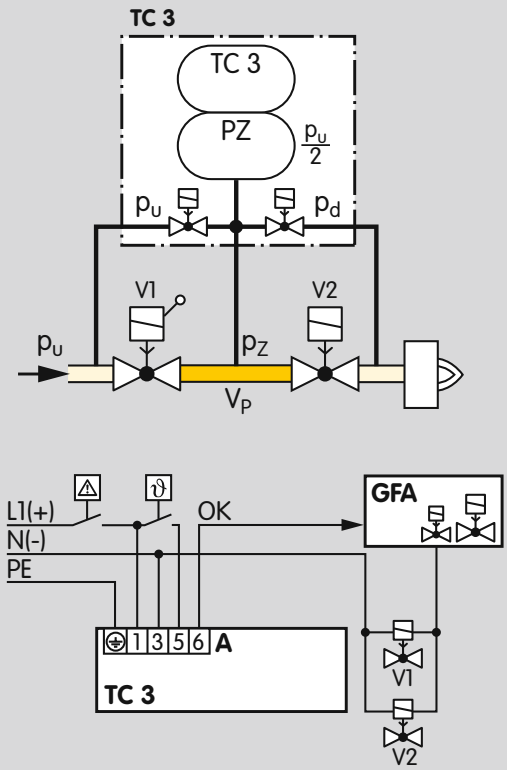

1.1.9 TC 3 with a manually resettable valve

Valves, which are manually reset, cannot be opened by the tightness control. The tightness test is then carried out using an additional auxiliary valve.

Tightness control TC 3 checks the tightness between the manually resettable valve V1 and gas solenoid valve V2 using the auxiliary valves installed in TC 3.

Once the tightness test has been carried out successfully, TC 3 forwards the OK enable signal.

V1 and V2: any.

A = Supply and signal forwarding

PZ = Internal pressure sensor of the TC for the comparison of inlet pressure p_u and interspace pressure p_z

p_d = Outlet pressure

V_P = Test volume

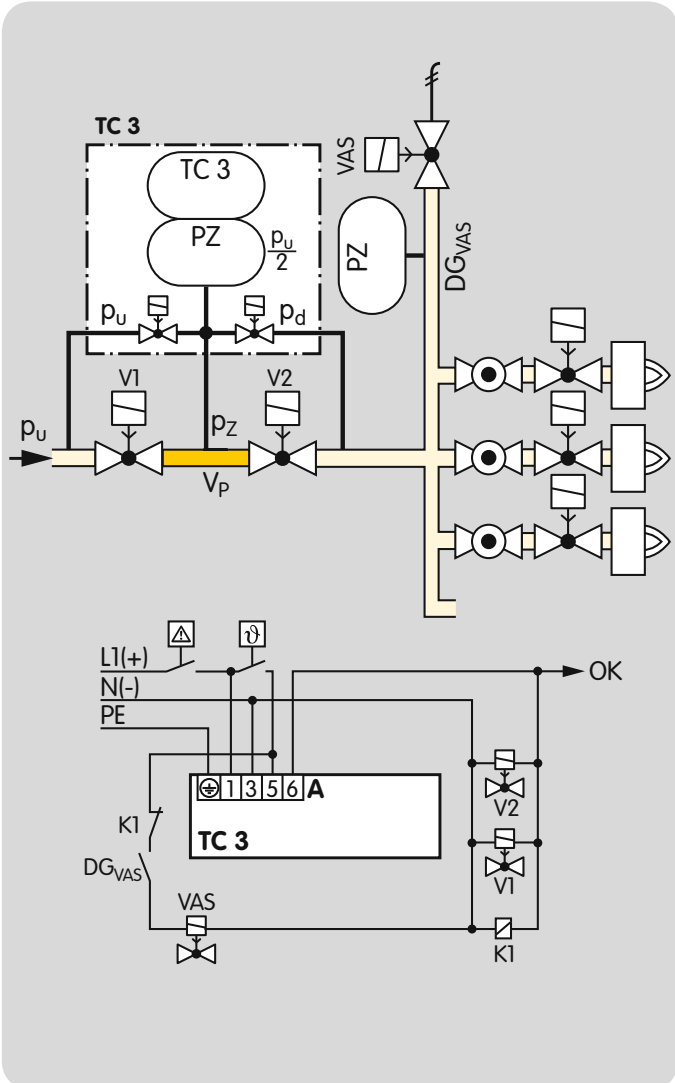

1.1.10 TC 3 in a multiple burner system with 3 valves installed in series

Tightness control TC 3 checks the slow opening main valves V1 and V2 for tightness. The test volume V_P is supplied and discharged via the TC 3 auxiliary valves.

Valve V2 can only be checked for tightness when the pressure downstream of V2 approximately corresponds to the atmospheric pressure and the volume downstream of valve V2 is 5 x V_P. The gas solenoid valve VAS and the pressure switch DG_{VAS} are used to relieve the pressure. The pressure switch must be adjusted in such a way so that enough pressure is relieved and no air can get into the pipework.

Once the tightness test has been carried out successfully, the tightness control TC 3 opens the main valves V1 and V2 with the OK enable signal and enables the downstream burner control units.

V1 and V2: any.

A = Supply and signal forwarding

PZ = Internal pressure sensor of the TC for the comparison of inlet pressure p_u and interspace pressure p_z

PZ = Pressure switch DG_{VAS} for monitoring the pressure downstream of V2

p_d = Outlet pressure

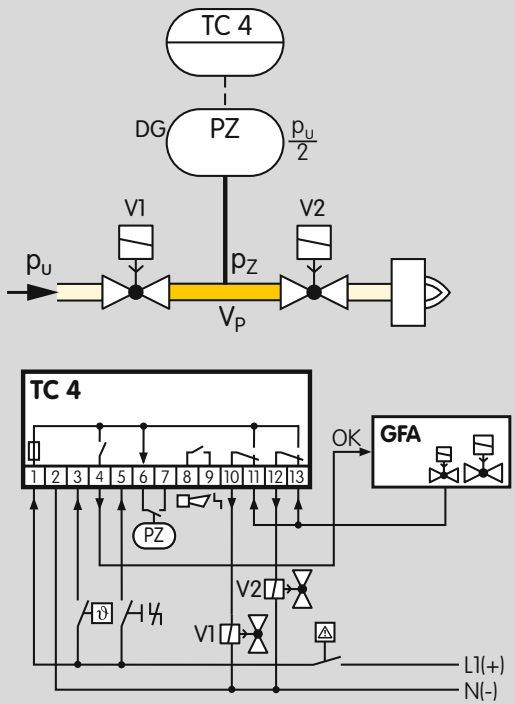

1.1.11 TC 4 with two gas solenoid valves

Tightness control TC 4 checks gas solenoid valves V1 and V2 for tightness.

The external pressure switch DG monitors the pressure between the two valves.

Once the tightness test has been carried out successfully, the tightness control forwards the OK enable signal to the automatic burner control unit GFA. The pilot valve output of the automatic burner control unit GFA opens the gas solenoid valves V1 and V2 simultaneously. The burner starts.

V1 and V2: quick or slow opening valves with start rate.

p_U = Inlet pressure

V_P = Test volume

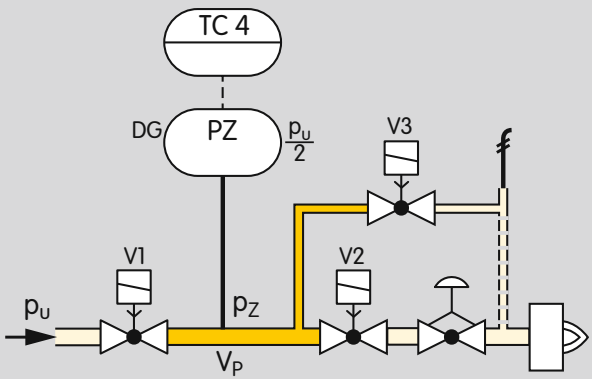

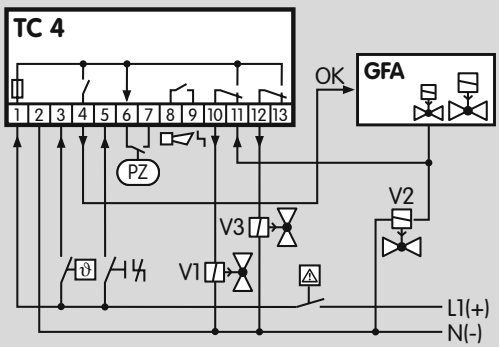

1.1.12 TC 4 with two gas solenoid valves and one auxiliary valve for discharge

Tightness control TC 4 checks the gas solenoid valves V1 and V2 and the auxiliary valve V3 for tightness.

It must be ensured that the interspace is vented during the 2-second opening time. This is not guaranteed by the gas pressure regulator upstream of V2. A relief line is thus used to discharge the test volume V_P safely into the combustion chamber or into a safe area. Since valve V2 remains closed during the test, it can also be a slow opening motorized valve VK.

If all the gas solenoid valves are tight, the tightness control forwards the OK enable signal to the automatic burner control unit GFA. The pilot valve output of the automatic burner control unit GFA opens the gas solenoid valves V1 and V2 simultaneously. The burner starts.

V1: quick or slow opening valve with start rate.
V2: any.
V3: quick opening, nominal size is dependent on test volume V_P and inlet pressure p_U, see page 34 (Project planning information), but is at least DN 15.

PZ = External pressure switch DG for the comparison of inlet pressure p_U and interspace pressure p_Z

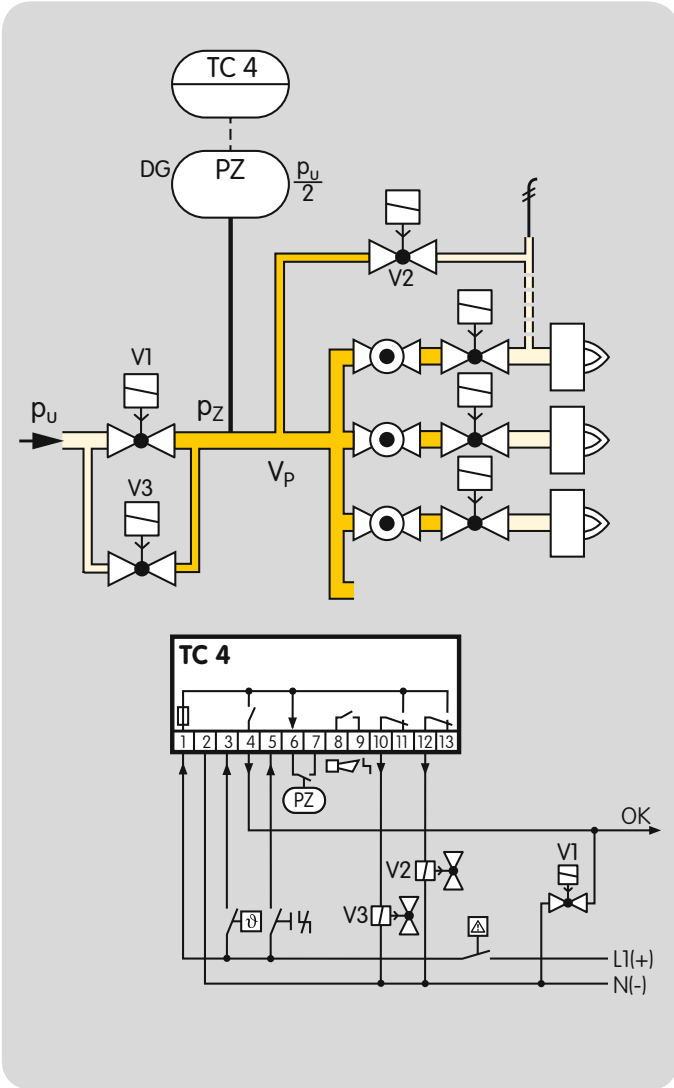

1.1.13 TC 4 in a multiple burner system with two auxiliary valves for supply and discharge

Tightness control TC 4 checks the central shut-off valve V1, auxiliary valves V1 and V2 and several burner valves for tightness.

The test volume V_P is supplied via the auxiliary valve V3.

The external pressure switch DG monitors the pressure between the gas solenoid valves V1, V2 and the burner valves.

Once the tightness test has been carried out successfully, TC 4 opens gas solenoid valve V1. The tightness control forwards the OK enable signal simultaneously to the automatic burner control units for the burner valves. The burner valves open and the burners start.

Thanks to the relief line and auxiliary valve V2, the test volume V_P is discharged into the combustion chamber or into a safe area.

V1: any.

V2 and V3: quick opening, nominal size is dependent on test volume V_P and inlet pressure p_U, see page 34 (Project planning information), but is at least DN 15.

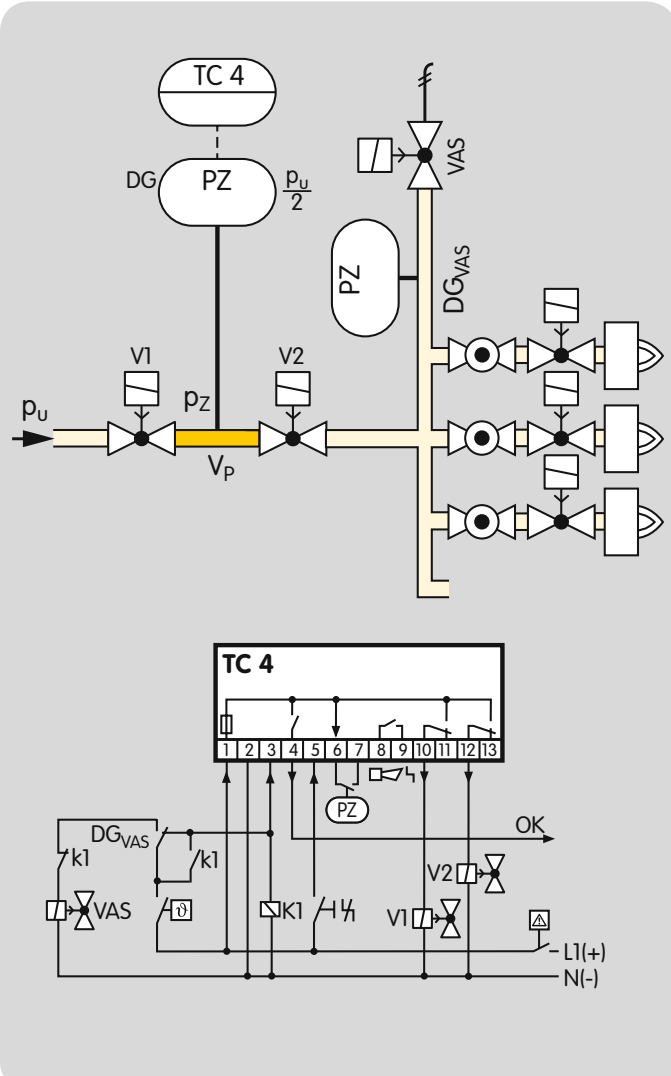

1.1.14 TC 4 in a multiple burner system with 3 valves installed in series

Tightness control TC 4 checks the central shut-off valve V1 and the gas solenoid valve V2 for tightness.

Valve V2 can only be checked for tightness when the pressure downstream of V2 approximately corresponds to the atmospheric pressure. The gas solenoid valve VAS and the pressure switch DG_{VAS} are used to relieve the pressure. The pressure switch must be adjusted in such a way so that enough pressure is relieved and no air can get into the pipework.

Once the start-up signal ϑ has been applied, first DG_{VAS} is scanned. If the pressure is correct, K1 picks up and closes the VAS. The tightness test starts.

Once the tightness test has been carried out successfully, the tightness control TC 4 opens the main valves V1 and V2 with the OK enable signal and enables the downstream burner control units.

V1 and V2: quick or slow opening valves with start rate.

p_U = Inlet pressure

V_P = Test volume

2 Certification

EC type-tested and certified

CE

- Declaration of conformity (D, GB) – see www.docuthek.com ➔ Elster Kromschröder ➔ Products ➔ 03 Valves and butterfly valves ➔ Tightness controls ➔ TC (K OS Declaration of conformity) ➔ Kind of Document: Certificate
- Tightness control TC is designed for applications pursuant to EN 746.

Meets the requirements of the

- Low Voltage Directive (2006/95/EC) in conjunction with the relevant standards.
- Electromagnetic Compatibility Directive (2004/108/EC) in conjunction with the relevant sections of IEC 801 relating to radiation, as well as EN 50093.

FM approved

TC 1, TC 2 and TC 3 for 120 V and 230 V, TC 4 for 24 V, 120 V and 230 V

FM APPROVED

Factory Mutual Research Class: 7411 Safety overpressure slam shut valves.

Designed for applications pursuant to NFPA 85 and NFPA 86.
www.approvalguide.com

UL listed

TC 2 and TC 4 for 120 V

c UL us LISTED

Standard: UL 353 Limit control.

Link to Underwriters Laboratories ➔ www.ul.com ➔ Energy ➔ Gas and Oil ➔ UL Online Certifications Directory ➔ enter company name

Gas Appliance Electric Accessories, ➔ Link to File: JHYR.MH28048, ANSI/UL 353, "Limit Controls"

Gas Appliance Electric Accessories Certified for Canada, ➔ Link to File: JHYR7.MH28048, CSA-C22.2 No. 24, "Temperature-Indicating and -Regulating Equipment"

AGA approved

AGA

Australian Gas Association, approval number: 4581
www.aga.asn.au/product_directory

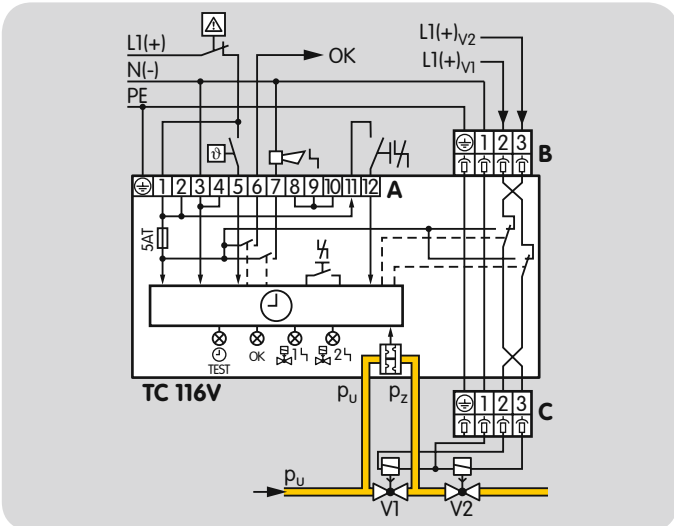

3 Function

3.1 Connection diagrams

Remote reset by applying mains voltage to terminal 12 or via a floating contact between terminals 11 and 12.

3.1.1 TC 116V for valVario controls VAS, VAG and VAD

The connection boxes of the valVario controls must be positioned on the same side and are connected via a single coupler plug, as shown.

A = Supply and signal forwarding
B = Automatic burner control unit
C = Gas solenoid valves

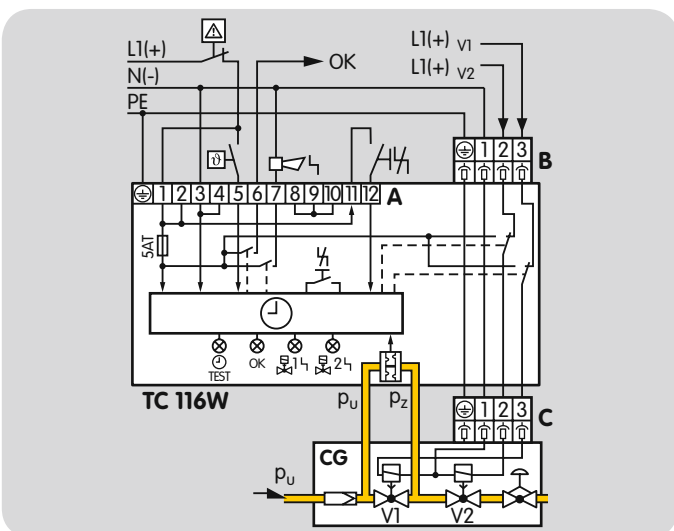

3.1.2 TC 116W

A = Supply and signal forwarding
B = Automatic burner control unit
C = Gas solenoid valves

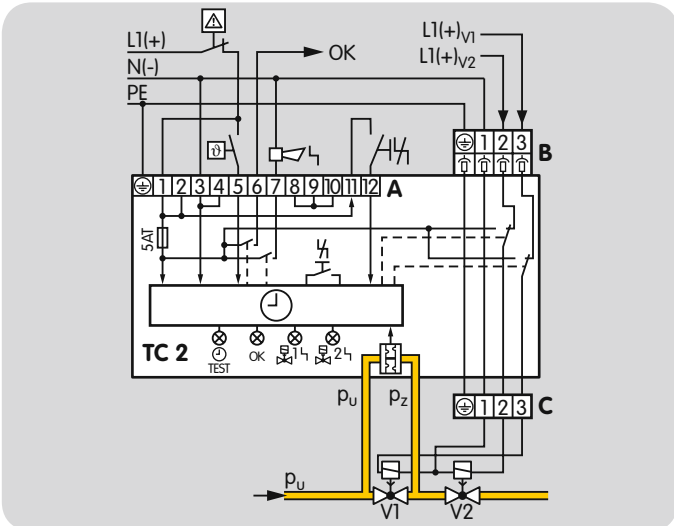

3.1.3 TC 2

A = Supply and signal forwarding
B = Automatic burner control unit
C = Gas solenoid valves wired as shown:
1 = neutral conductor N (-) = blue
2 = mains voltage to burner-side valve L_{V2} (+) = brown
3 = mains voltage to inlet valve L_{V1} (+) = black

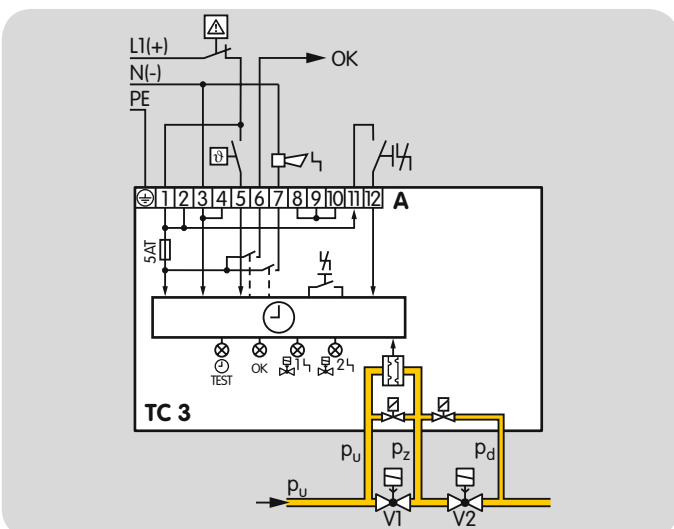

3.1.4 TC 3

A = Supply and signal forwarding

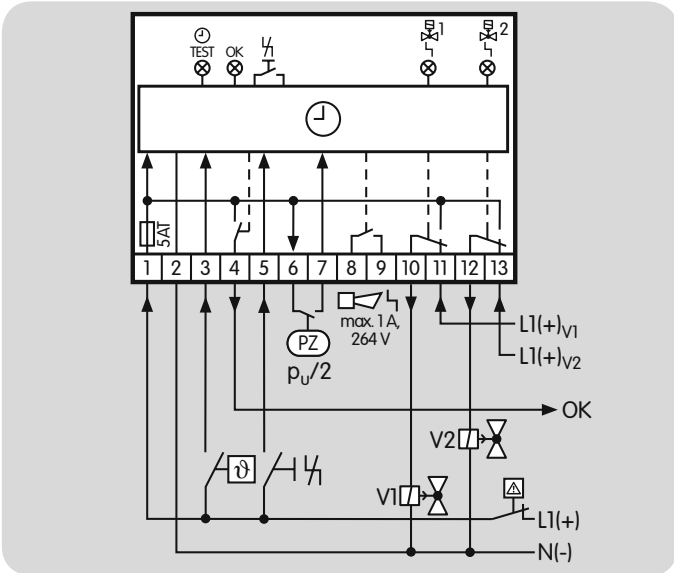

3.1.5 TC 4

Fault signalling contact on terminals 8 and 9:
signalling contact (not internally fused), max. 1 A for 264 V, max. 2 A for 120 V.

Connect the NO contact on the pressure switch to terminals 6 and 7.

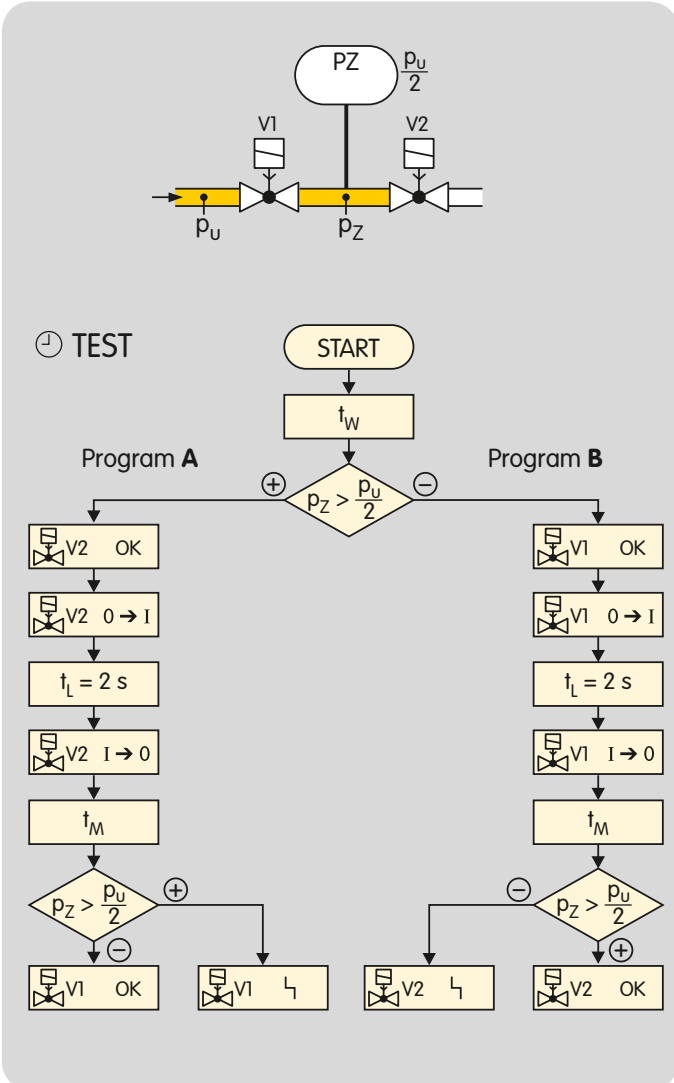

3.2 Program sequence

The TEST starts with the waiting time t_W.

Once the waiting time t_W has elapsed, the tightness control TC checks the pressure p_Z between the inlet valve V1 and the outlet valve V2.

Program A

If the pressure p_Z is greater than half the inlet pressure $p_U/2$, valve V2 is OK.

V2 opens for the fixed opening time t_L of 2 s and the test volume is discharged. V2 closes again. During the measurement time t_M, the TC checks the pressure p_Z between the valves again. If the pressure p_Z is now less than half the inlet pressure $p_U/2$, valve V1 is also OK.

Program B

If the pressure p_Z is less than half the inlet pressure $p_U/2$, valve V1 is OK.

V1 opens for the fixed opening time t_L of 2 s and the test volume is supplied. V1 closes again. If the pressure p_Z is now greater than half the inlet pressure $p_U/2$, valve V2 is also OK.

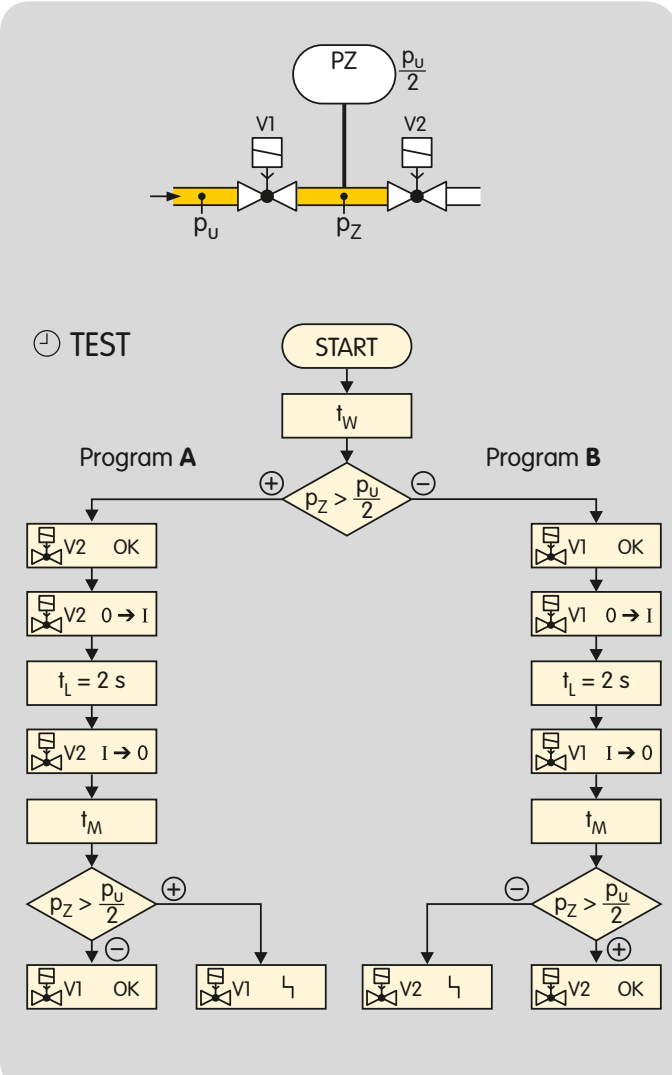

The tightness control TC runs program **A** or **B** depending on the initial situation. Both valves are checked for tightness respectively, but only one valve is opened at a time.

During the test, the TC also checks their fail-safe operation.

After a brief power failure during the tightness test or operation, the TC restarts automatically.

3.3 Test instant

A jumper (left) is used to determine whether the tightness of the gas solenoid valves is to be checked before or after burner run. The tightness control TC is set to "Test before burner run", Mode 1, at the factory.

The test period t_P is set using the second jumper (right), see page 30 (Test period tP).

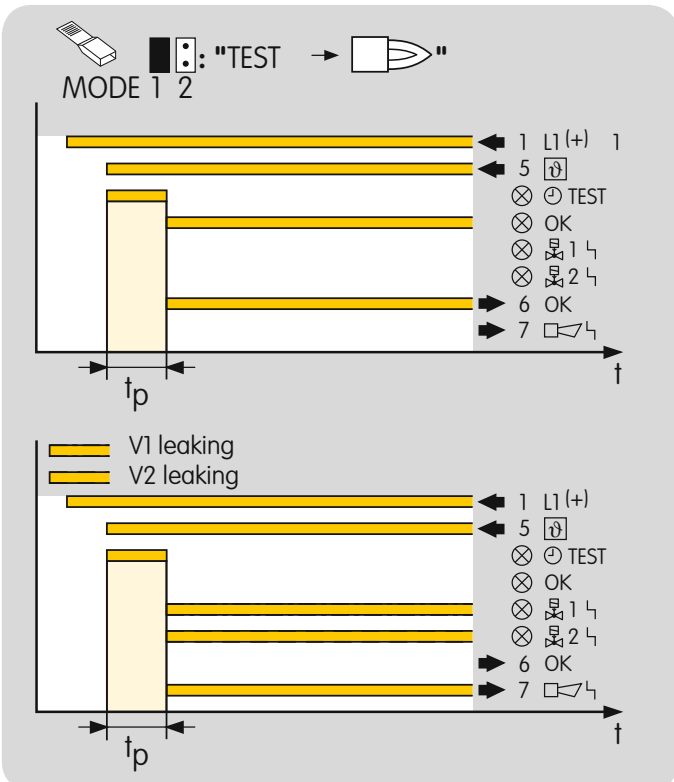

3.3.1 Testing before burner run: Mode 1

Mains voltage L1 is switched on. Once the start-up signal ϑ has been applied, the tightness test starts. If the valves are tight, the green OK LED lights up. The OK enable signal is forwarded to the automatic burner control unit.

If the tightness control TC detects a leak on one of the two valves, the red LED lights up for a fault on valve V1 1 or valve V2 2. A fault is signalled externally, e.g. by switching on a buzzer or a warning light.

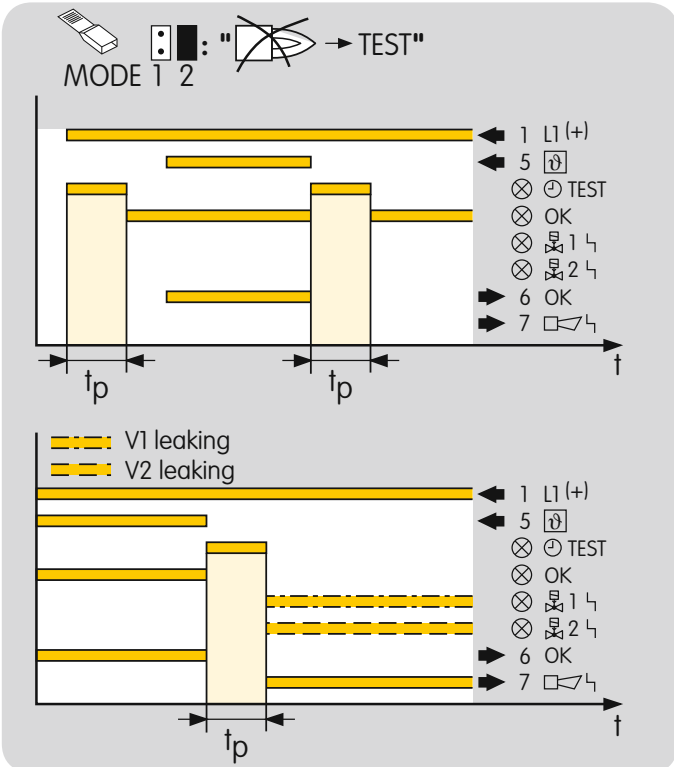

3.3.2 Testing after burner run: Mode 2

If the jumper is set to Mode 2, the tightness test after burner run begins as soon as the burner is switched off.

To ensure that the valves are checked for tightness once before starting up the system, the tightness test runs when the voltage L1 is applied. If the valves are tight, the green OK LED lights up. The OK enable signal is not forwarded to the automatic burner control unit until the start-up signal ϑ has been applied.

Once the start-up signal ϑ has been switched off, the tightness test after burner run begins. The OK enable signal is not forwarded to the automatic burner control unit again until the start-up signal ϑ has been applied.

If the tightness control TC detects a leak on one of the two valves, the red LED lights up for a fault on valve V1 1 or valve V2 2. A fault is signalled externally, e.g. by switching on a buzzer or a warning light.

3.4 Power failure

An external fault signal ⊏◁ϟ is forwarded by the tightness control and one of the two red LEDs on the TC lights up to indicate a leak on valve V1 or valve V2. After a power failure, the external fault signal remains active. Both red LEDs are now lit. Once a tightness test has been carried out again, the TC detects the leaking valve.

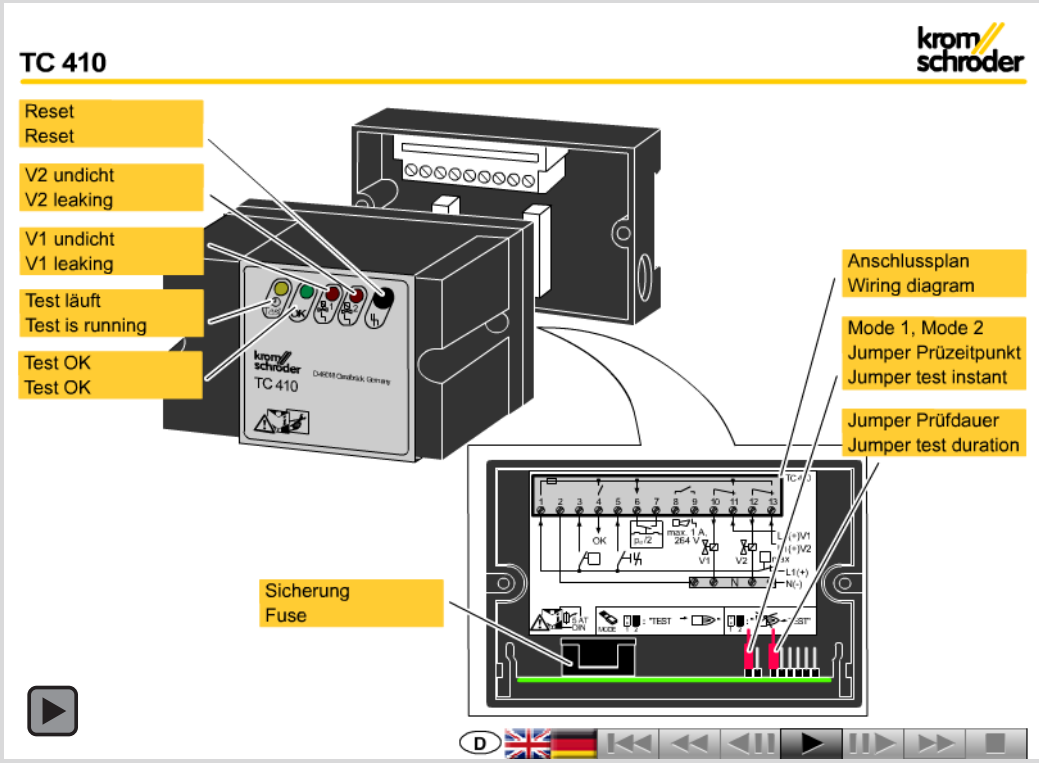

3.5 Animation

The interactive animation shows the function of the tightness control TC 4.

Click on the picture. The animation can be controlled using the control bar at the bottom of the window (as on a DVD player).

To play the animation, you will need Adobe Reader 7 or a newer version. If you do not have Adobe Reader on your system, you can download it from the Internet. Go to www.adobe.com, click on "Adobe Reader" in the "Download" section and follow the instructions.

If the animation does not start to play, you can download it from the document library www.docuthek.com as an independent application.

3.6 Test period t_P

The sensitivity of the tightness control TC can be adjusted by adapting the test period t_P for each individual system. The longer the test period t_P, the greater the sensitivity of the TC. It is set using the second jumper on the unit, see page 26 (Test instant).

Type	Test period t_P
TC 1, TC 2, TC 3	10 to 60 s
TC 410-1	10 to 60 s
TC 410-10	100 to 600 s

The required test period t_P is calculated from:

Inlet pressure p_U [mbar]
Leakage rate V_L [l/h]
Test volume V_P [l]

$$t_P\,[s] = 4 \times \left(\frac{p_U\,[mbar] \times V_P\,[l]}{V_L\,[l/h]} + 1\,s \right)$$

See page 43 (Conversion factors)

3.6.1 Leakage rate V_L

It is possible to check a specific leakage rate V_L using the TC. Within the scope of the European Union, the maximum leakage rate V_L is 0.1% of the maximum flow rate $Q_{max.}$ [m³/h (n)].

$$\text{Leakage rate } V_L\,[l/h] = \frac{Q_{max.}\,[m^3/h\,(n)] \times 1000}{1000}$$

If a small leakage rate V_L is to be detected, a long test period t_P must be set.

3.6.2 Test volume V_P

Test volume V_P is calculated from the valve volume V_V, added to the volume of the pipe V_R for each additional metre in length L, see page 32 (Calculation example).

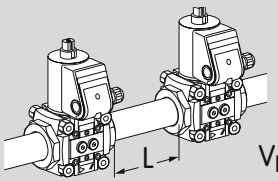

$$V_P = V_V + L \times V_R$$

Valves	Valve volume V_V [l]	DN	Volume of the pipe per metre V_R [l/m]
VG 10	0.01	10	0.1
VG 15	0.07	15	0.2
VG 20	0.12	20	0.3
VG 25	0.2	25	0.5
VG 40/VK 40	0.7	40	1.3
VG 50/VK 50	1.2	50	2
VG 65/VK 65	2	65	3.3
VG 80/VK 80	4	80	5
VG 100/VK 100	8.3	100	7.9
VG 125/VK 125	13.6	125	12.3
VG 150/VK 150	20	150	17.7
VG 200/VK 200	42	200	31.4
VG 250/VK 250	66	250	49
VAS 1	0.25		
VAS 2	0.82		
VAS 3	1.8		
VAS 6	1.1		
VAS 7	1.4		
VAS 8	2.3		
VAS 9	4.3		

Test volume V_P for TC 410-10 is almost arbitrary thanks to the adjustable max. test period t_P of 600 s.

3.6.3 Calculation example

2 valves VAS 665, DN 65,
distance L = 9.5 m (31.2 ft),
inlet pressure p_U = 50 mbar (20 "WC),
max. flow rate $Q_{max.}$ = 200 m³/h (7062 SCFH).

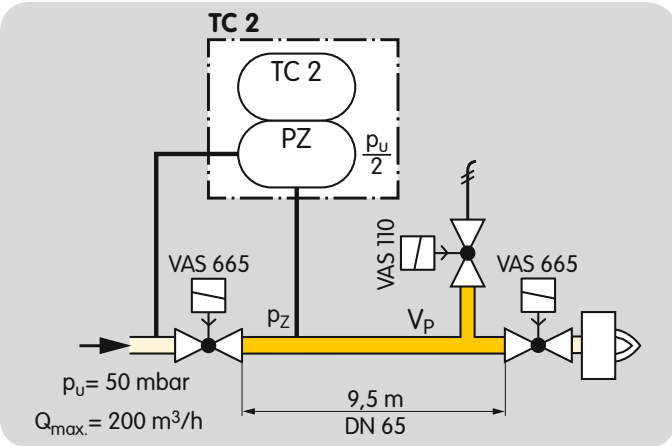

$$\text{Leakage rate } V_L\,[l/h] = \frac{200\ m^3/h \times 1000}{1000} = 200\ l/h\ (52.8\ gal/h)$$

Valve and pipe volumes, see page 31 (Test volume VP).

Test volume V_P [l] = 1.1 l + 9.5 m x 3.3 l/m = 32.45 l (8.44 gal)

$$\text{Test period } t_P\,[s] = 4 \times \left(\frac{50 \times 32.45}{200} + 1 \right) = 36.45\ s$$

Set the next highest value (40 s) with the jumper, see page 26 (Test instant).

Selecting the relief valve, see page 34 (Project planning information).

3.6.4 Calculating the test period t_P

◉ Standard ○ T-product

Inlet pressure p_U	50.0	mbar
Max. flow rate $Q_{max.}$	200	m3/h
Max. leakage rate V_L	200	l/h
Nominal diameter DN	65	2 1/2"
Distance L between V1 and V2	9.50	m
Test volume V_P	33.4	Liter
Calculated test period t_P	37	s
Test period t_P to be set	40	s

4 Selection

4.1 Selection table

	1	0	6	8	T	-1*	-10	R	N	V**	W	05	K	N	T
TC 1	●	–	●	–	○	●	–	–	–	●	●	●	●	●	●
TC 2	●	–	–	●	○	●	–	●	●	–	–	●	●	●	●
TC 3***	●	–	–	●	○	●	–	●	●	–	–	●	●	●	●
TC 4	●	●	–	–	○	●	●	–	–	–	–	–	●	●	●

● = *standard*, ○ = *available*

Order example

TC 318R05T

** Designation "-1" only in type code for TC 4*
*** An additional adapter plate is required for the TC 116V for attachment on the right- or left-hand side of valVario controls, see page 37 (Accessories)*
**** Max. test volume V_P TC 3, see page 34 (Project planning information)*

4.2 Type code

Code	Description
TC	Tightness control
1	For attachment to valVario controls and CG
2	For quick opening individual valves
3	For quick or slow opening or manually resettable individual valves
4	For control cabinet installation
1	Testing before or after burner run
0	External pressure switch required
6	6 mm (0.24") connection
8	8 mm, ¼" (0.31") connection
T	T-product
-1	Test period 10 to 60 s
-10	Test period 100 to 600 s
R	Rp internal thread
N	NPT internal thread
V	Mounted to valVario controls using adapter plate
W	Mounted to combination control CG
05	$p_{U\ max.}$ 500 mbar (7.25 psig)
K	Mains voltage: 24 V DC
N	110/120 V AC, 50/60 Hz
T	220/240 V AC, 50/60 Hz

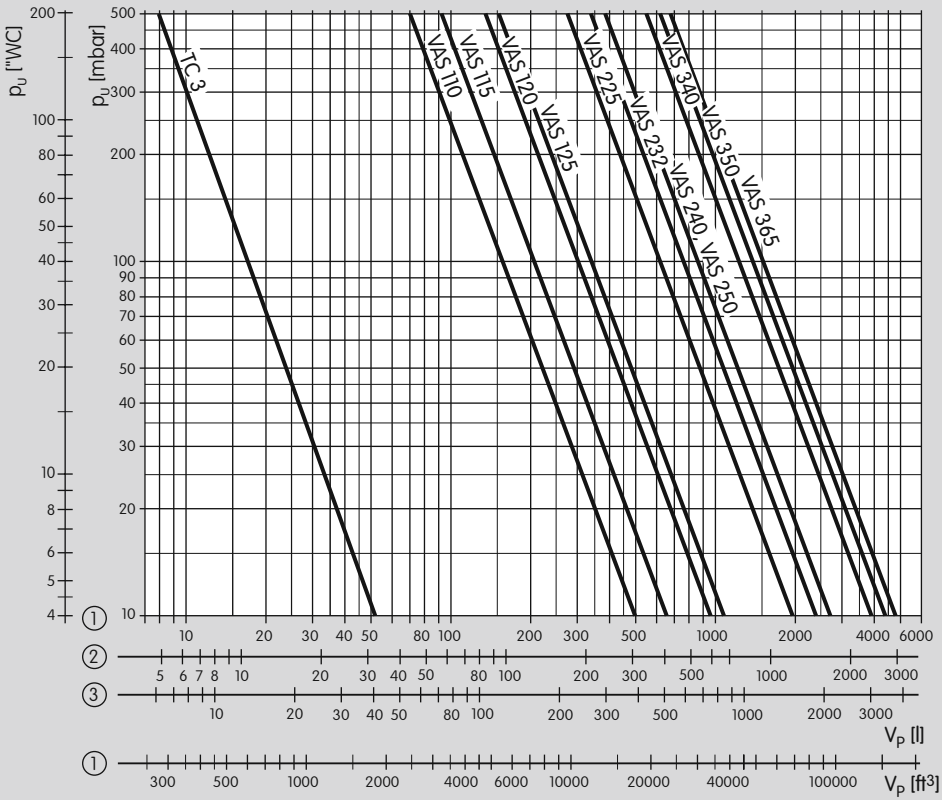

① = Natural gas ρ = 0.8 kg/m³ (0.05 lbs/ft³)

② = Propane ρ = 2.01 kg/m³ (0.13 lbs/ft³)

③ = Air ρ = 1.29 kg/m³ (0.08 lbs/ft³)

5 Project planning information

On slow opening valves without start rate or pneumatically operated valves, the test volume can be supplied or discharged via auxiliary valves if discharge into the furnace chamber is impossible for process reasons.

5.1 Selecting the auxiliary valves

Selecting auxiliary valve V1:

Values for V_P and p_U, see page 32 (Calculation example)

V_P = 32.45 l (8.44 gal),
p_U = 50 mbar (19.5 "WC),
selected ⇒ VAS 110.

The valve is sufficiently large to vent the pipe between the valves.

5.2 Start rate

The tightness control TC requires a minimum start rate in order to carry out tightness tests on slow opening valves:

up to 5 l (1.3 gal) test volume V_P =
5% of maximum flow rate $Q_{max.}$,
up to 12 l (3.12 gal) test volume V_P =
10% of maximum flow rate $Q_{max.}$.

5.3 Installation

Installation position TC 1 to TC 3: in the vertical or horizontal position, front panel must not point upwards or downwards.

Installation position TC 4: any.

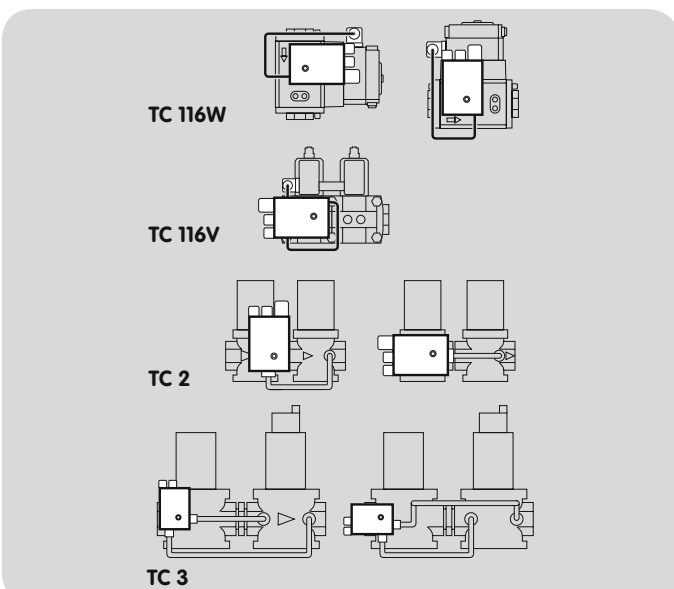

In the case of very large test volumes V_P, an installed relief line should be of nominal size 40 to allow for the discharge of the test volume V_P.

Avoid condensation in the system.

The tightness control TC must not be in contact with masonry, minimum distance 20 mm (0.78 inches).

5.2.1 TC 116V for valVario controls

The connection boxes of the valVario controls must be positioned on the same side and are connected via a coupler plug.

On a valve/pressure regulator combination, the pressure regulator must be positioned at the outlet.

When using a gas solenoid valve with air/gas ratio control VAG, the air/gas ratio control must be activated with air during the test period t_P so that the valve can discharge the interspace pressure p_Z.

5.2.2 TC 4

Install by bolting the lower section.

The upper section containing the detection circuitry is a push connection fit into the lower section. For installation in the control cabinet housing, for example, the lower section can be secured with screws or mounted on a DIN rail.

Snap attachment for DIN rails
Width = 35 mm (1.36 inch).

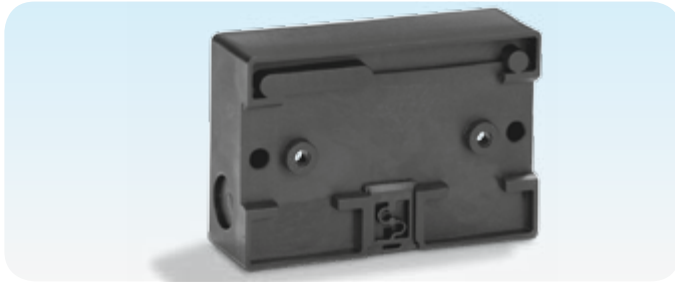

6 Accessories

6.1 Adapter plate for TC 116V, attachment to valVario controls

For VAS 1 – 3

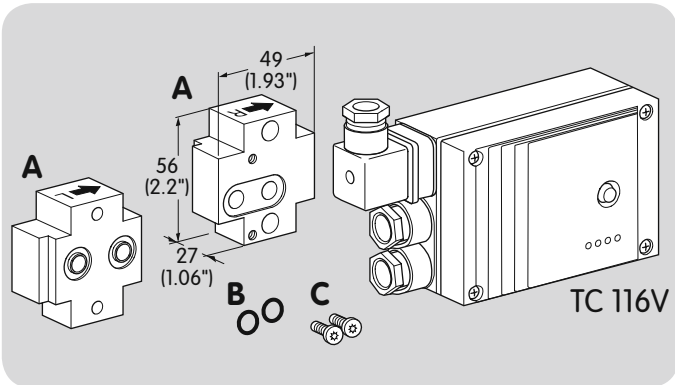

An adapter plate is required to attach the tightness control to the right- or left-hand side of the gas solenoid valve VAS 1 – 3:

Scope of delivery: **A** 1 × adapter plate,
B 2 × O-rings,
C 2 × retaining screws.

For attachment to: left-hand side: Order No. 74922391
right-hand side: Order No. 74921995

For VCS 6 – 9

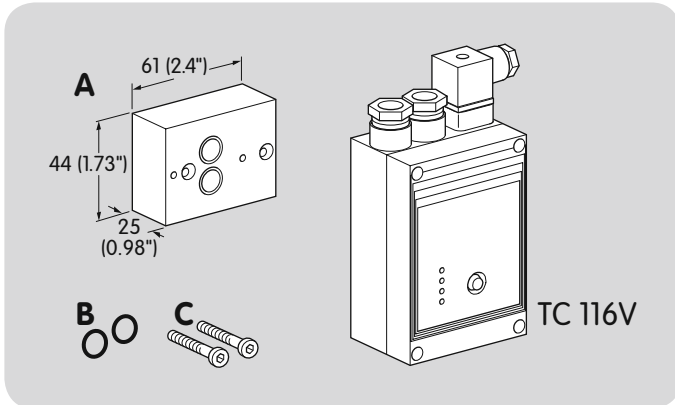

An adapter plate is required to attach the tightness control to the double solenoid valve VCS 6 – 9:

Scope of delivery: **A** 1 × adapter plate,
B 2 × O-rings,
C 2 × retaining screws.

Order No. 74922822

6.2 External pressure switch for TC 4

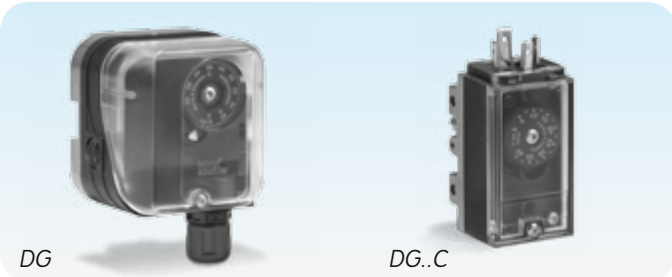

Gas pressure switches DG, DG..C for monitoring the pressure between the valves to be checked.

For inlet pressures of 0.5 to 500 mbar (0.2 to 195 "WC).

The switching differential may not exceed ±10% of the set switching pressure.

(see Technical Information bulletin Pressure switch for gas DG, DG..C at www.docuthek.com).

6.2.1 Adjustment

The external pressure switch is set to half the inlet pressure $p_U/2$ (only NO contact required) in order to check both valves with equal sensitivity.

Example:
p_U = 100 mbar (39 "WC),
set switching pressure $p_U/2$ = 50 mbar (19.5 "WC).

7 Technical data

Mains voltage:
110/120 V AC, -15/+10%, 50/60 Hz,
220/240 V AC, -15/+10%, 50/60 Hz,
24 V DC, ±20%.

Power consumption:
10 VA for 110/120 V AC and 220/240 V AC, 1.2 W for 24 V DC.

Ambient temperature:
-15 to +60°C (+5 to +140°F), no condensation permitted.

Screw terminals 2.5 mm^2.

Fusing:
fine-wire fuse 5 A, slow-acting, H pursuant to IEC 127, also protects the valve outputs and external operating signal.

The input current at terminal 1 must not exceed 5 A.

External operating signal:
with mains voltage, max. 5 A resistive load
(UL listed: 5 A for 120 V),
max. 2 A at cos φ = 0.35 (pilot duty).

External fault signal:
fault signalling contact, max. 5 A for 264 V.

Reset:
using a button on the device.
Remote reset:
by applying mains voltage.

Number of operating cycles:
Relay outputs: 250,000 pursuant to EN 298,
Reset button: 1000.

Housing made of impact-resistant plastic.

TC 1–3

For natural gas, town gas and LPG (gaseous), also for biologically produced methane.

Inlet pressure p_U: 10 to 500 mbar (3.9 to 195 "WC).

Test period t_P: 10 to 60 s, adjustable.
Set at the factory to 10 s.

TC 3: power consumption of the installed valves during the opening time t_L: max. 9.5 VA (W).

Enclosure: IP 54.

Standard coupler plug to DIN 43650/ISO 4400.

Weight:
TC 1: 550 g (1.21 lbs).
TC 2: 900 g (1.98 lbs).
TC 3: 1500 g (3.31 lbs).

TC 4

Gas type and inlet pressure p_U:
dependent on external pressure switch.

The pressure switch is set to half the inlet pressure $p_U/2$. The switching differential may not exceed ±10% of the set switching pressure, see page 38 (External pressure switch for TC 4).

Test period t_P:
TC 410-1: 10 to 60 s, adjustable.
Set at the factory to 10 s.
TC 410-10: 100 to 600 s, adjustable.
Set at the factory to 100 s.

Enclosure: IP 40.

External fault signal:
signalling contact (not internally fused),
max. 1 A for 264 V, max. 2 A for 120 V.

Lower section with connection terminals.

5 knock-out holes for M16 plastic cable glands.

Weight: approx. 400 g (0.88 lbs).

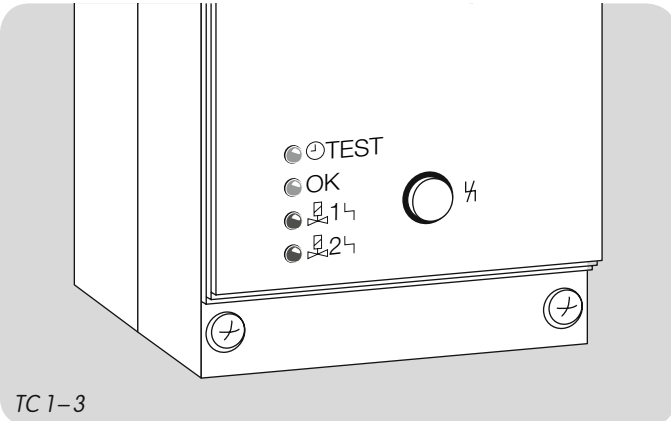

TC 1 – 3

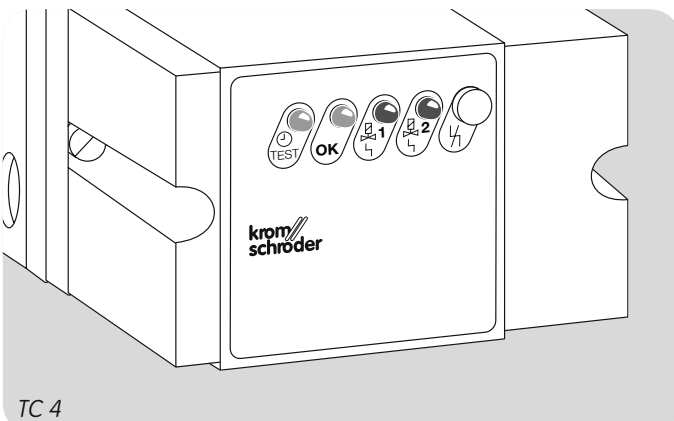

TC 4

7.1 Indicators and operating controls

TEST = TEST phase (yellow)
OK = Operating signal (green)
1 = Fault valve 1 (red)
2 = Fault valve 2 (red)
= Reset button

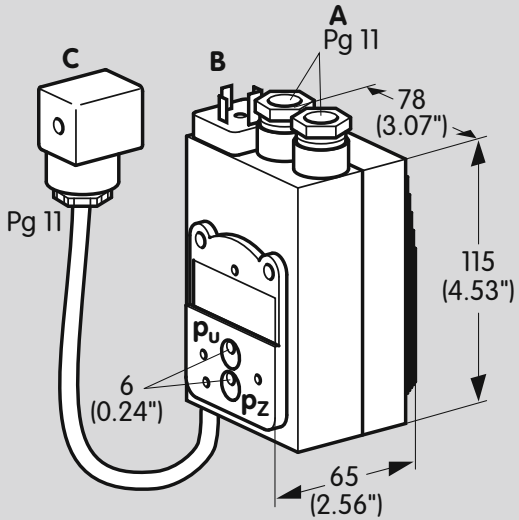

TC 1

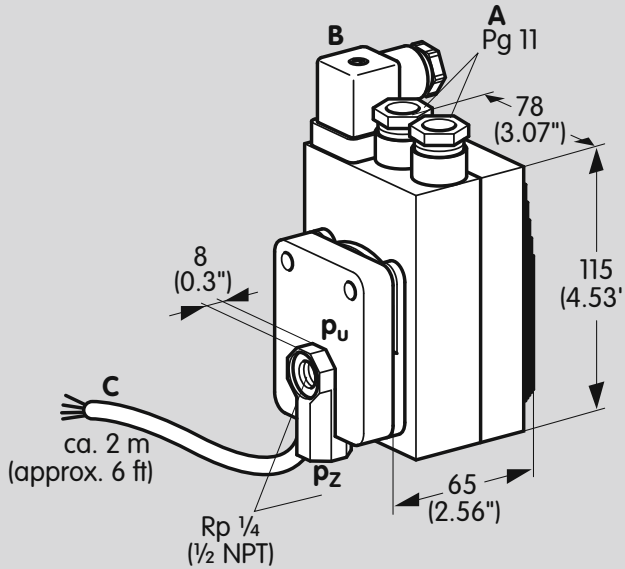

TC 2

7.2 Dimensions

7.2.1 TC 1, TC 2

A = Supply and signal forwarding
B = Automatic burner control unit
C = Gas solenoid valves
p_e, p_u = Inlet pressure p_u
p_z = Interspace pressure p_z

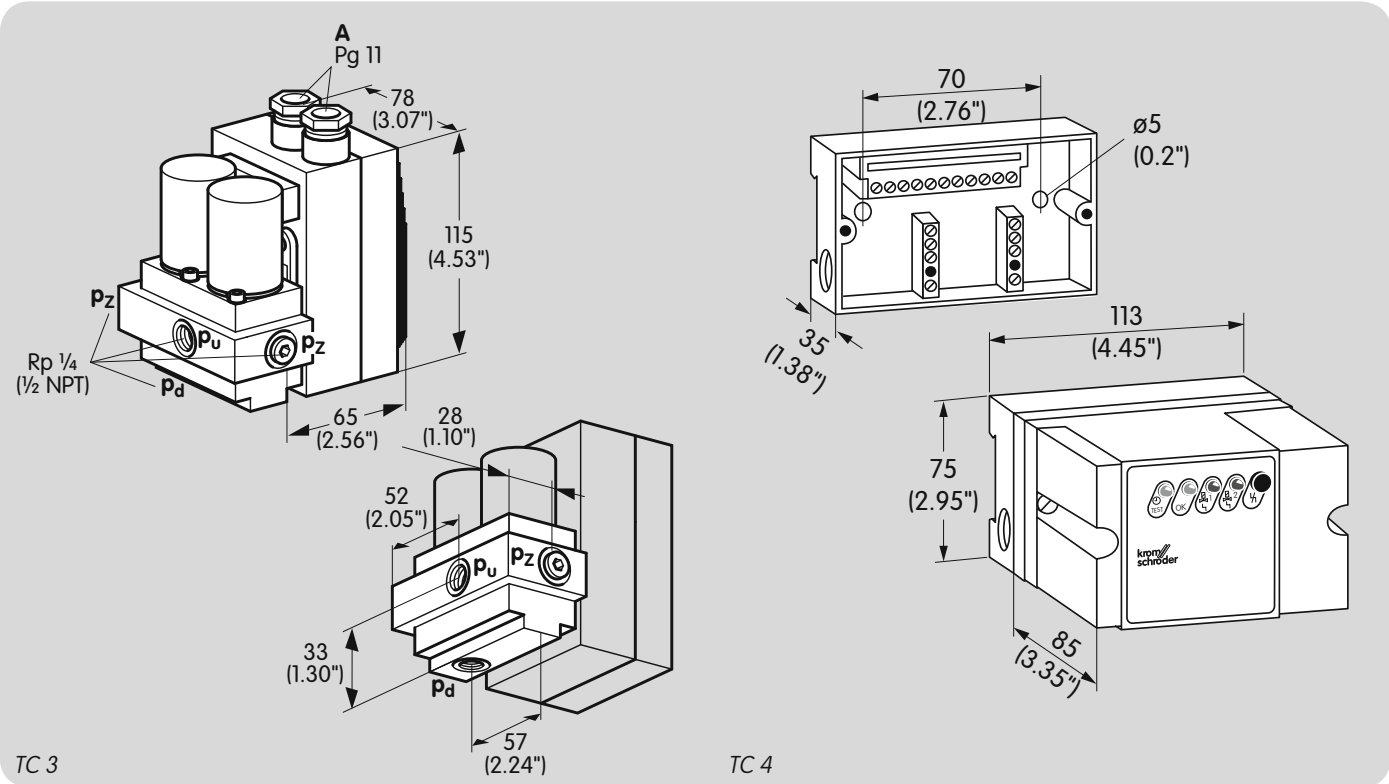

7.2.2 TC 3, TC 4

A = Supply and signal forwarding
p_u = Inlet pressure p_u
p_z = Interspace pressure p_z
p_d = Outlet pressure p_d

7.3 Conversion factors

SI unit ×	multiplier =	US unit
m^3/h	35.31	SCFH
bar	14.5	psi
mbar	0.0145	psi
mbar	0.39	"WC
mm	0.039	inch
kg	2.2	lbs
litres	0.26	gal

US unit ×	multiplier =	SI unit
SCFH	0.0283	m^3/h
psi	0.0689	bar
psi	68.89	mbar
"WC	2.54	mbar
inch	25.4	mm
lbs	0.45	kg
gal	3.79	litres

$°C = (°F - 32) \times {}^{5}/_{9}$

$°F = (°C \times {}^{9}/_{5}) + 32$

8 Maintenance cycles

The tightness control requires little servicing. We recommend a function check once a year.

9 Legend

$p_U/2$	Half the inlet pressure
p_Z	Interspace pressure*
L1 (+)	Voltage
	Start-up signal
TEST	Test phase
OK	Ready for operation
	Safety interlocks (Limits)
1	Fault gas valve V1
2	Fault gas valve V2
	Fault signal
	Gas valve
	Air valve
	Flame signal
	Reset
	Input signal
	Output signal
t_P	Test period**
t_W	Waiting time
t_L	Opening time = 2 s
t_M	Measurement time

** The interspace pressure is the pressure between the gas solenoid valves to be checked for tightness.*

*** The test period t_P is the sum of the waiting time t_W, the fixed opening time t_L of 2 s and the measurement time t_M.*

Feedback

Finally, we are offering you the opportunity to assess this "Technical Information (TI)" and to give us your opinion, so that we can improve our documents further and suit them to your needs.

Clarity

- ○ Found information quickly
- ○ Searched for a long time
- ○ Didn't find information
  What is missing?
- ○ No answer

Comprehension

- ○ Coherent
- ○ Too complicated
- ○ No answer

Scope

- ○ Too little
- ○ Sufficient
- ○ Too wide
- ○ No answer

Use

- ☐ To get to know the product
- ☐ To choose a product
- ☐ Planning
- ☐ To look for information

Navigation

- ○ I can find my way around
- ○ I got "lost"
- ○ No answer

My scope of functions

- ○ Technical department
- ○ Sales
- ○ No answer

Remarks

(Adobe Reader 7 or higher required)
www.adobe.com

Contact

Elster GmbH
Postfach 2809 · 49018 Osnabrück
Strotheweg 1 · 49504 Lotte (Büren)
Germany

T +49 541 1214-0
F +49 541 1214-370
info@kromschroeder.com

www.kromschroeder.com
www.elster.com

The current addresses of our international agents are available on the Internet:
www.kromschroeder.de/index.php?id=718&L=1

We reserve the right to make technical modifications in the interests of progress.

Copyright © 2013 Elster Group
All rights reserved.

03250636